Application range

H \ L	600	700	800	900	1000	1100	1200	1300	1400	1500	1600
4000	100%	100%	100%	100%	100%	100%	100%	100%	100%	100%	100%
3900	100%	100%	100%	100%	100%	100%	100%	100%	100%	100%	100%
3800	100%	100%	100%	100%	100%	100%	100%	100%	100%	100%	100%
3700	100%	100%	100%	100%	100%	100%	100%	100%	100%	100%	100%
3600	100%	100%	100%	100%	100%	100%	100%	100%	100%	100%	100%
3500	100%	100%	100%	100%	100%	100%	100%	100%	100%	100%	100%
3400	100%	100%	100%	100%	100%	100%	100%	100%	100%	100%	100%
3300	100%	100%	100%	100%	100%	100%	100%	100%	100%	100%	100%
3200	100%	100%	100%	100%	100%	100%	100%	100%	100%	100%	100%
3100	100%	100%	100%	100%	100%	100%	100%	100%	100%	100%	100%
3000	100%	100%	100%	100%	100%	100%	100%	100%	100%	100%	100%
2900	100%	100%	100%	100%	100%	100%	100%	100%	100%	100%	100%
2800	100%	100%	100%	100%	100%	100%	100%	100%	100%	100%	100%
2700	100%	100%	100%	100%	100%	100%	100%	100%	100%	100%	100%
2600	100%	100%	100%	100%	100%	100%	100%	100%	100%	100%	100%
2500	100%	100%	100%	100%	100%	100%	100%	100%	100%	100%	96%
2400	100%	100%	100%	100%	100%	100%	100%	100%	100%	100%	90%
2300	100%	100%	100%	100%	100%	100%	100%	100%	100%	93%	84%
2200	100%	100%	100%	100%	100%	100%	100%	100%	97%	87%	78%
2100	100%	100%	100%	100%	100%	100%	100%	100%	90%	80%	71%
2000	100%	100%	100%	100%	100%	100%	100%	94%	83%	73%	65%

Doors subject to heavy duty as public building with doors with closer or automatic doors have a limited range of application H=3000 and L=1400 and must be fitted with the third or fourth white hinge as in the diagram.

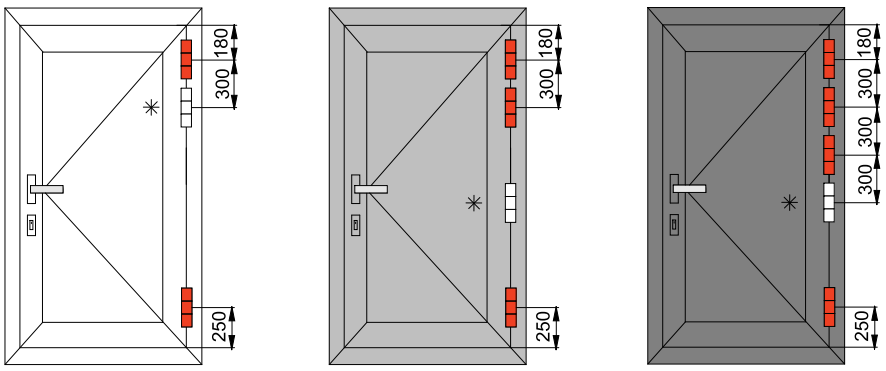

ART. Two wings	LOAD CAPACITY
8074	100% = 120 Kg

ART. Three wings	LOAD CAPACITY
8074.6	100% = 140 Kg

MASTER

TECHNICAL ASSEMBLY INSTRUCTIONS

Cilindrika

http://www.masteritaly.com

ADJUSTABLE DOOR HINGE FOR WINDOW PROFILES

ART. Two wings	ART. Three wings
8074	8074.6

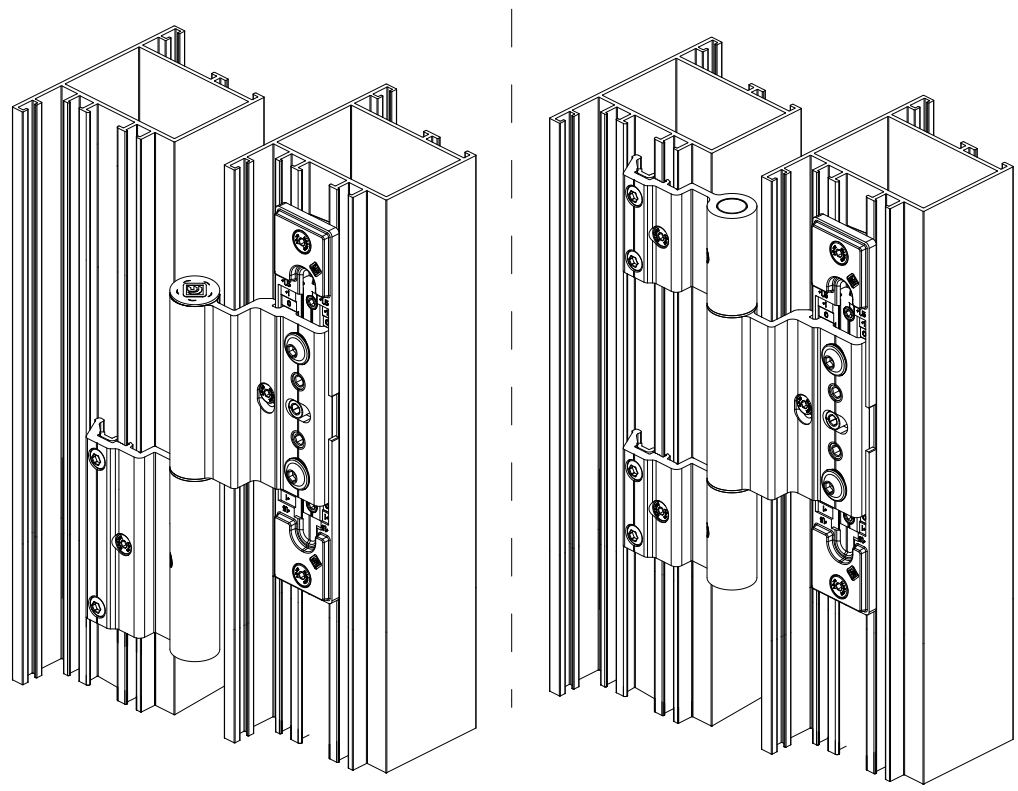

MASTER S.r.l. - I609A - A3FR - 08/10/2020

Master does not bear any responsibility for possible inexactnesses due to printing mistakes or to transcription

Side section

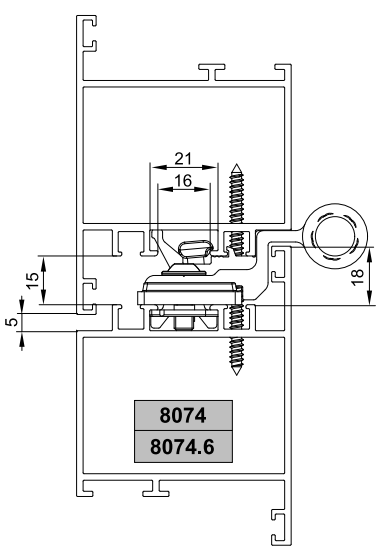

Mill finish

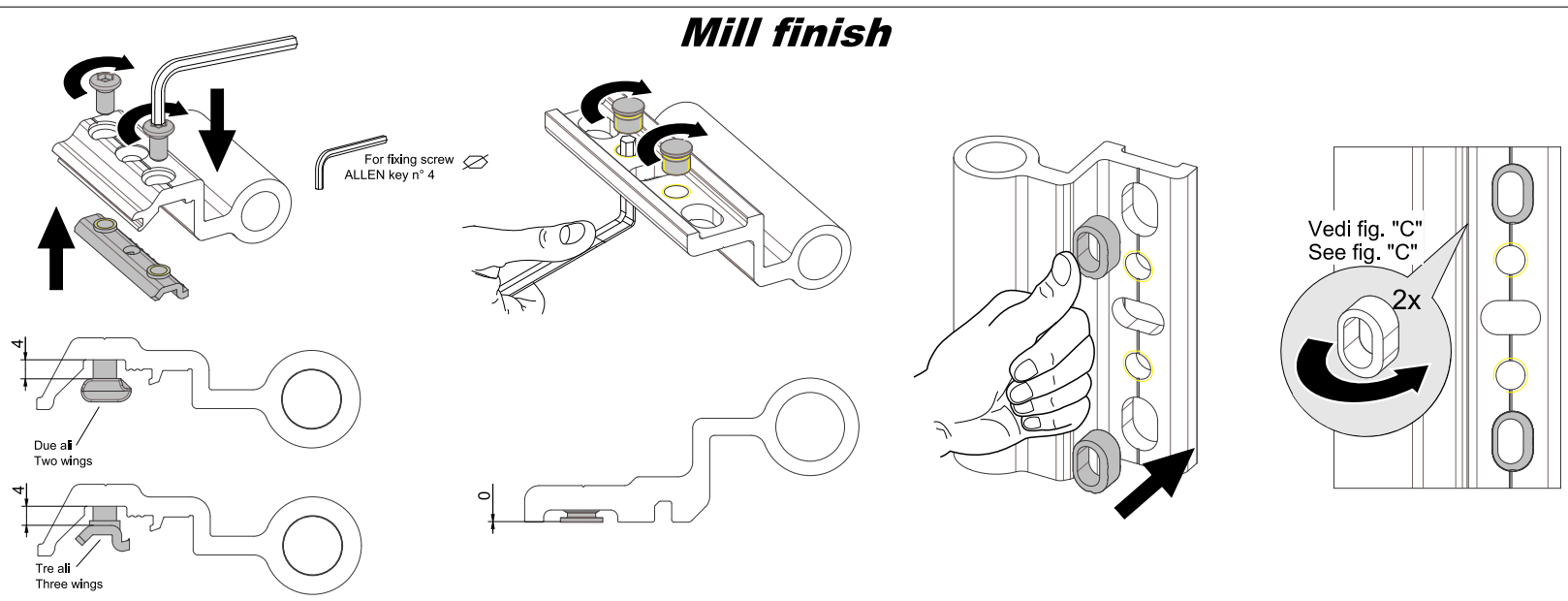

Pre-assembly

Two wings
8074

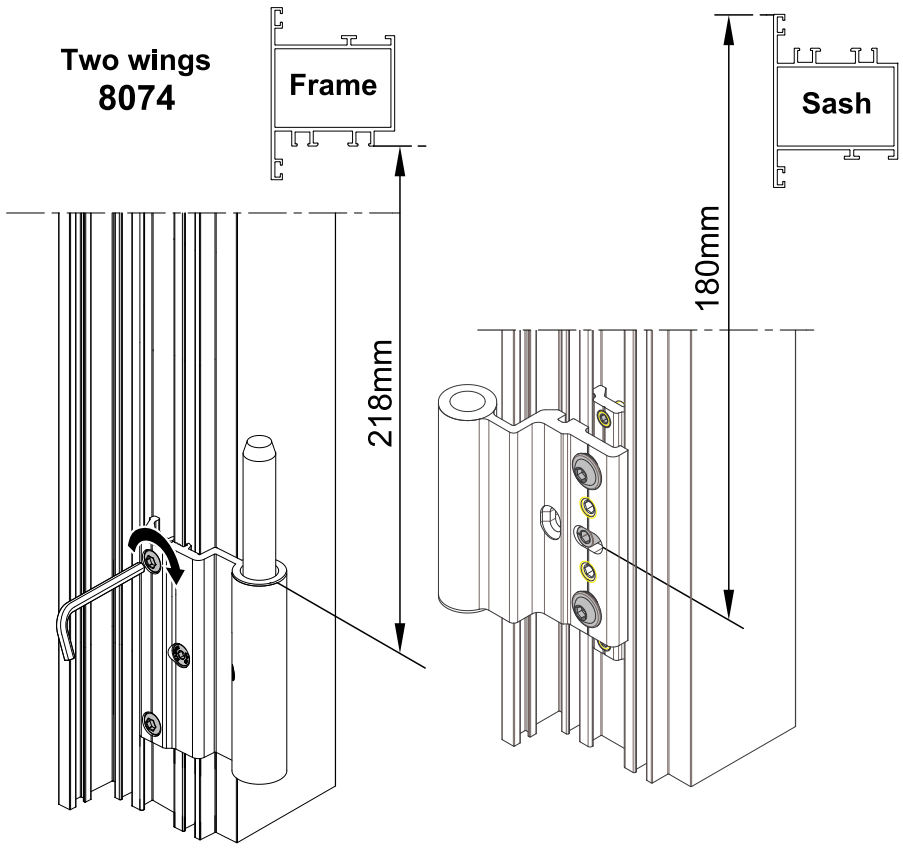

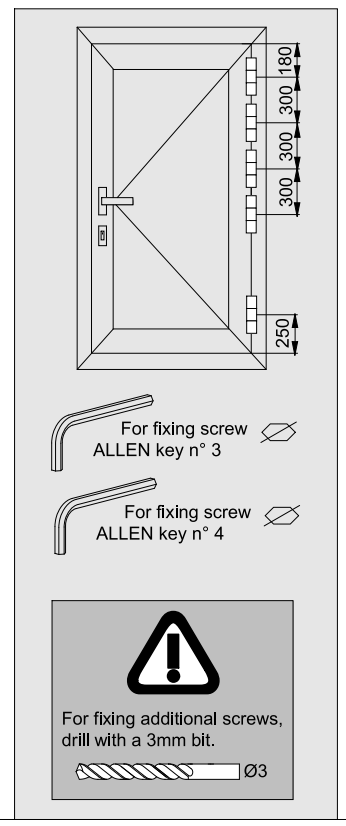

Three wings
8074.6

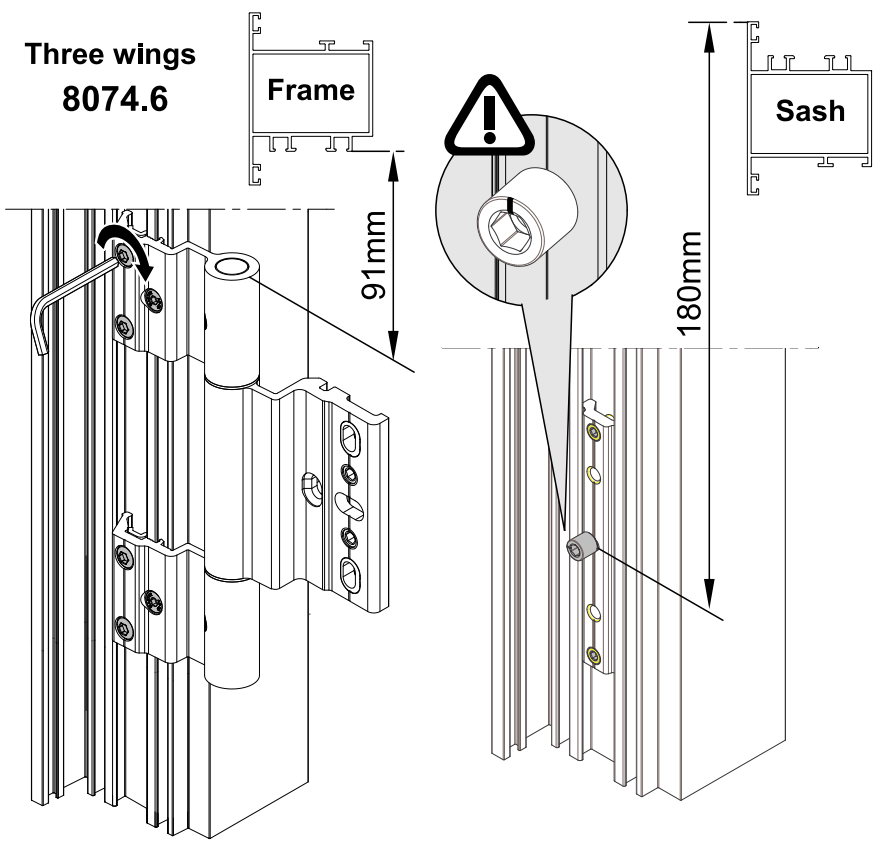

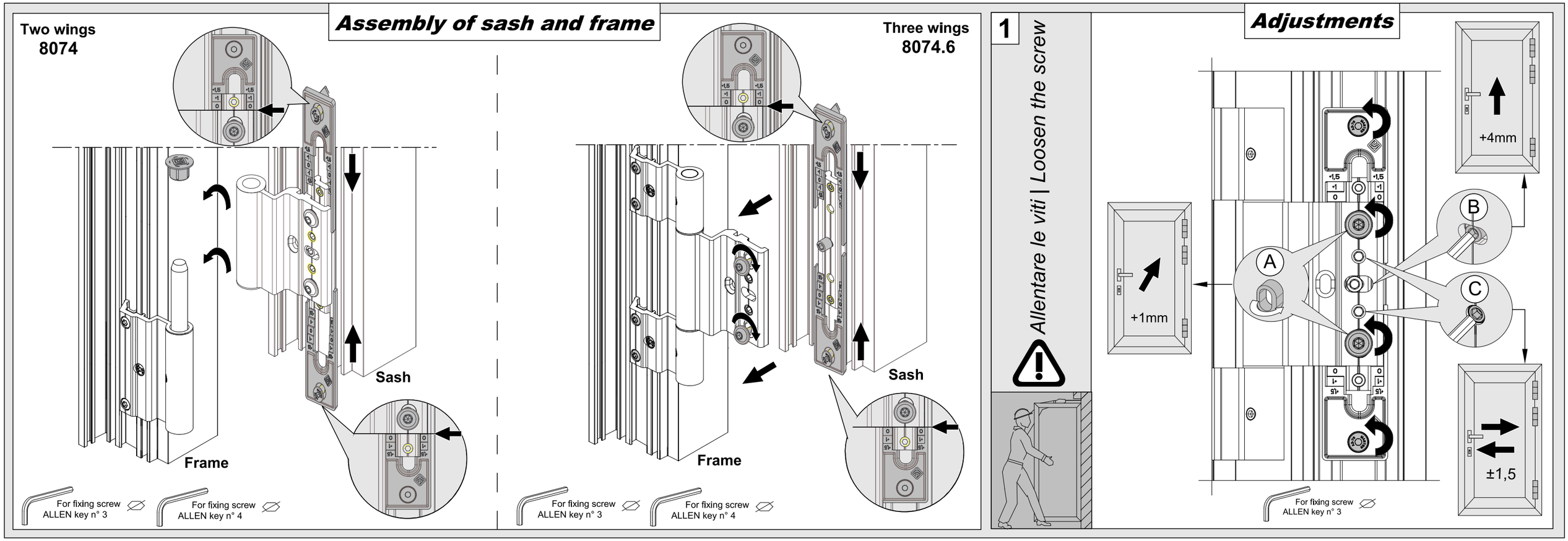
Assembly of sash and frame
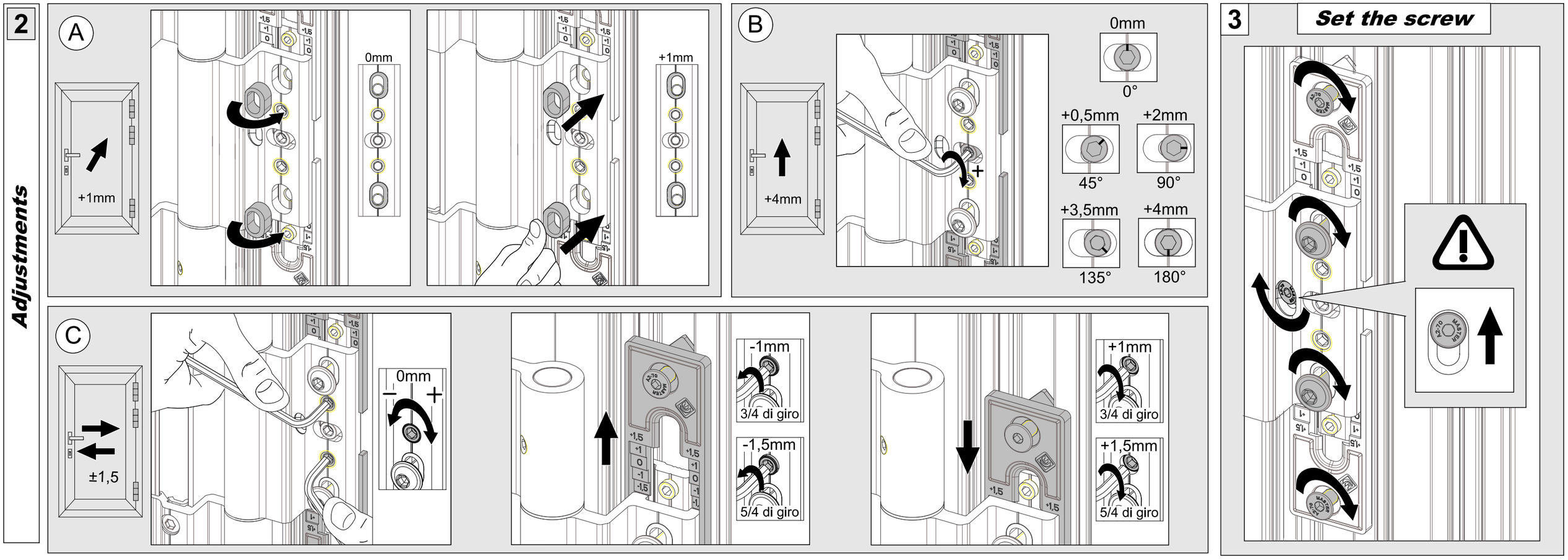
Adjustments